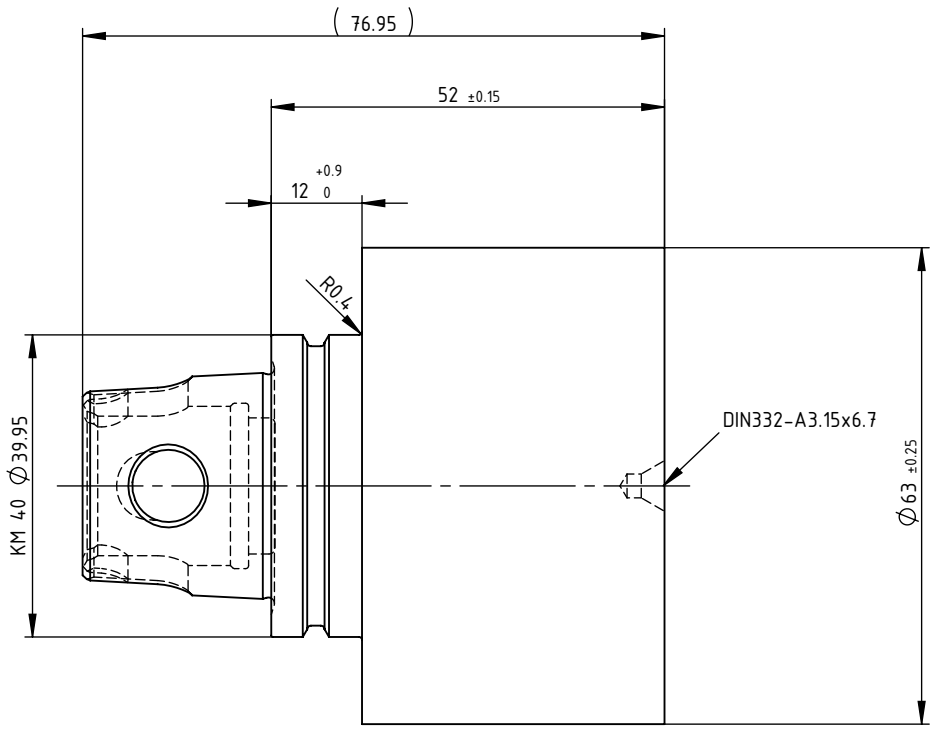

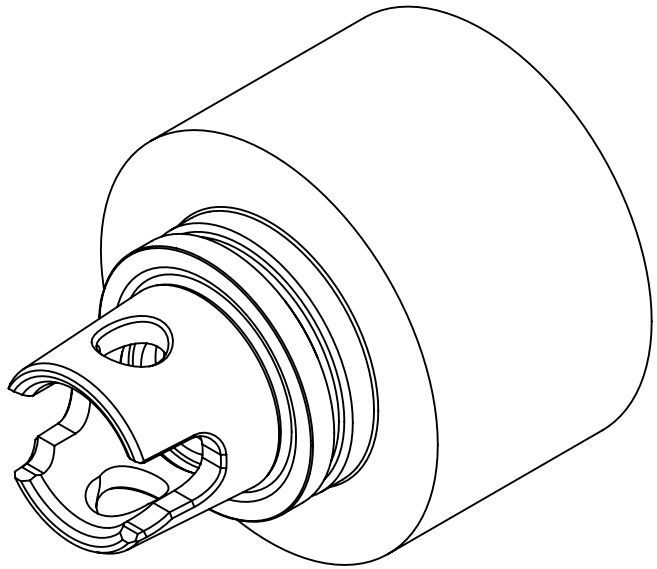

Blank

KM40 / ø63

KM40-BN63-52

KM4.RoU.001.052

material Type: 1.6582

Hardness: -2/ 43 /+3 HRc on all cross section

Gewicht: 1138g

Datum: 10.07.2009